SECTION ACC

ACCELERATOR CONTROL SYSTEM

CONTENTS

PRECAUTIONS **2**
Precautions for Supplemental Restraint System (SRS) "AIR BAG" and "SEAT BELT PRE-TENSIONER" 2

ACCELERATOR CONTROL SYSTEM **3**
Removal and Installation 3
REMOVAL 3
INSTALLATION 3
INSPECTION AFTER INSTALLATION 3

PRECAUTIONS

PFP:00001

Precautions for Supplemental Restraint System (SRS) "AIR BAG" and "SEAT BELT PRE-TENSIONER"

ABS00DCY

The Supplemental Restraint System such as "AIR BAG" and "SEAT BELT PRE-TENSIONER", used along with a front seat belt, helps to reduce the risk or severity of injury to the driver and front passenger for certain types of collision. Information necessary to service the system safely is included in the SRS and SB section of this Service Manual.

WARNING:

- **To avoid rendering the SRS inoperative, which could increase the risk of personal injury or death in the event of a collision which would result in air bag inflation, all maintenance must be performed by an authorized NISSAN/INFINITI dealer.**
- **Improper maintenance, including incorrect removal and installation of the SRS, can lead to personal injury caused by unintentional activation of the system. For removal of Spiral Cable and Air Bag Module, see the SRS section.**
- **Do not use electrical test equipment on any circuit related to the SRS unless instructed to in this Service Manual. SRS wiring harnesses can be identified by yellow and/or orange harnesses or harness connectors.**

ACCELERATOR CONTROL SYSTEM

PFP:18005

Removal and Installation

ABS00D0V

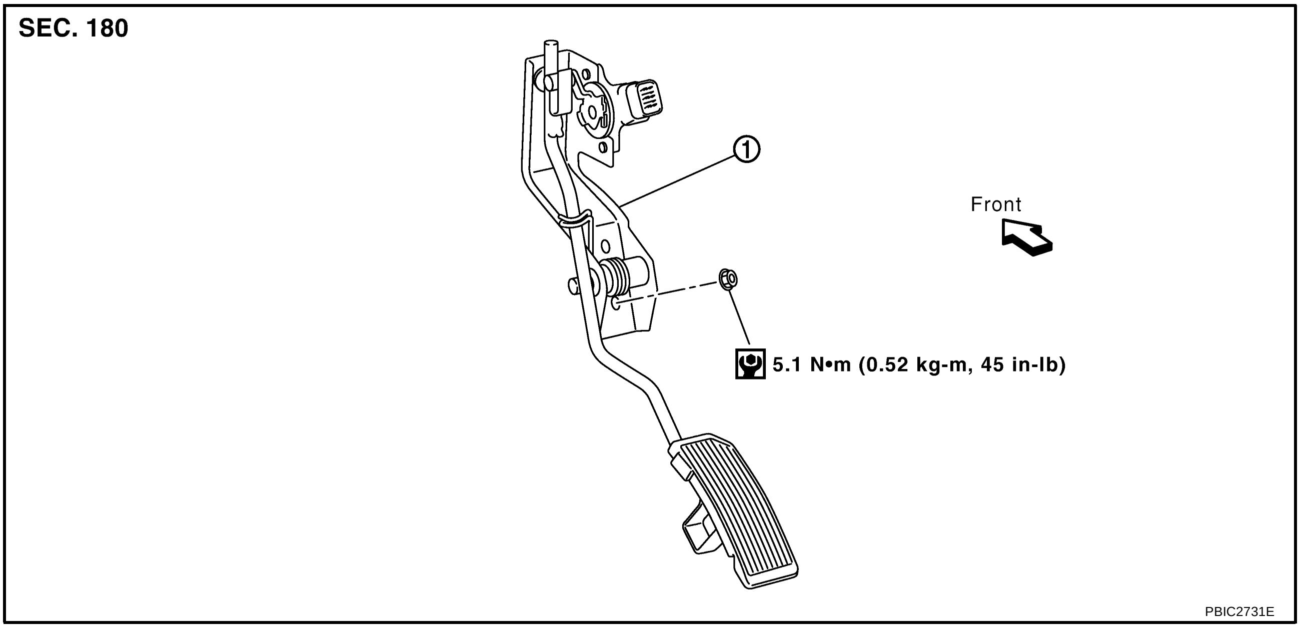

1. Accelerator pedal assembly

REMOVAL

1. Disconnect accelerator pedal position sensor harness connector.
2. Loosen nuts, and remove accelerator pedal assembly.

   CAUTION:
   - **Do not disassemble accelerator pedal assembly. Do not remove accelerator pedal position sensor from accelerator pedal assembly.**
   - **Avoid impact from dropping etc. during handling.**
   - **Be careful to keep accelerator pedal assembly away from water.**
   - **Do not adjust adjusting screw (painted yellow).**

INSTALLATION

Install in the reverse order of removal.

INSPECTION AFTER INSTALLATION

CAUTION:

When the harness connector of the accelerator pedal position sensor is disconnected, perform “Accelerator Pedal Released Position Learning”. Refer to EC-88, "Accelerator Pedal Released Position Learning" .

- Make sure that accelerator pedal moves smoothly within the whole operation range.
- Make sure that accelerator pedal securely returns to the original position.
- For the electrical inspection of accelerator pedal position sensor, refer to EC-555, "DTC P2122, P2123 APP SENSOR" , EC-562, "DTC P2127, P2128 APP SENSOR" and EC-578, "DTC P2138 APP SENSOR" .